LOBERON
COMING HOME

15 min

1

AX8	BX1	CX4
ϕ6x30mm		8x30mm

1

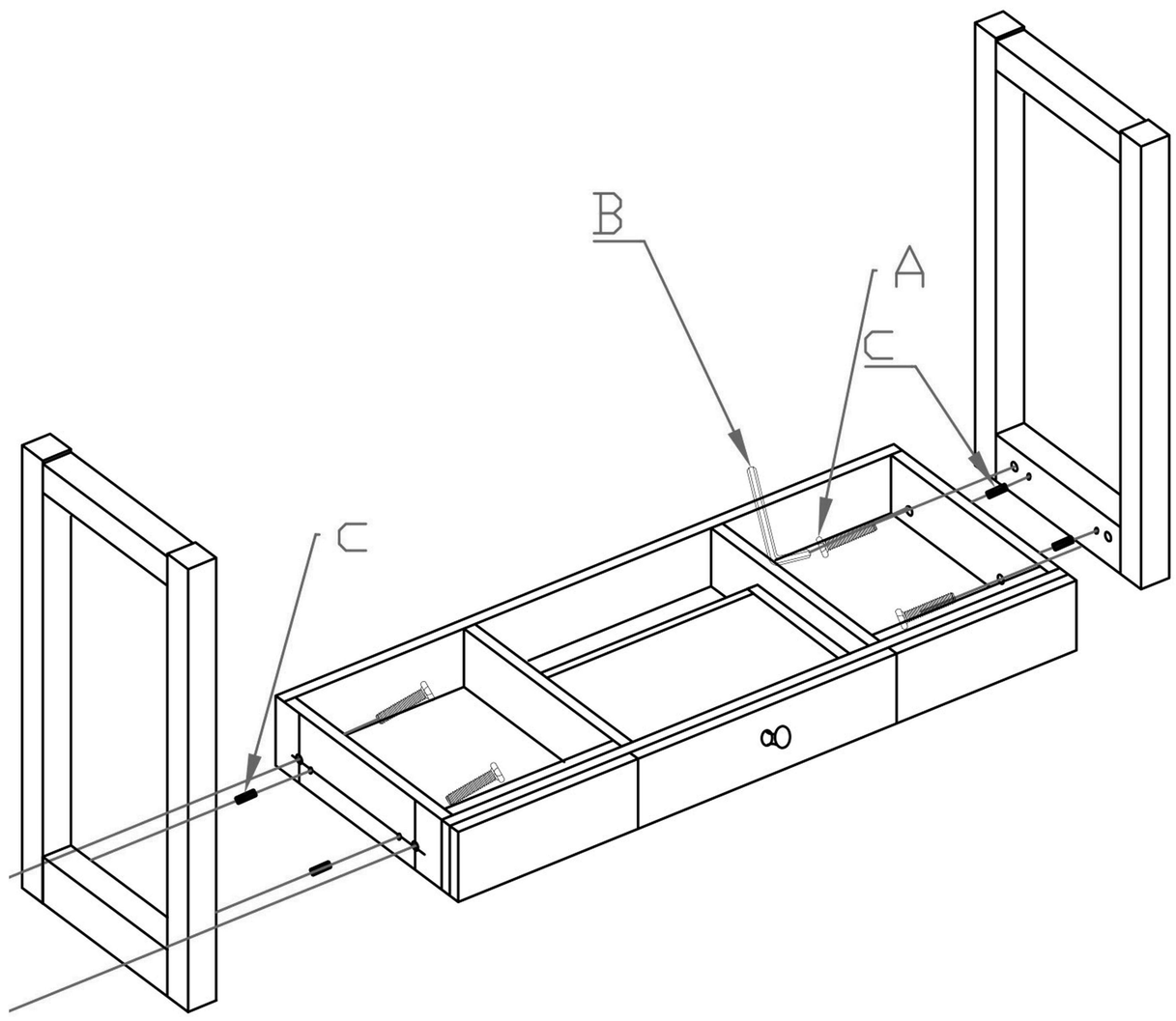
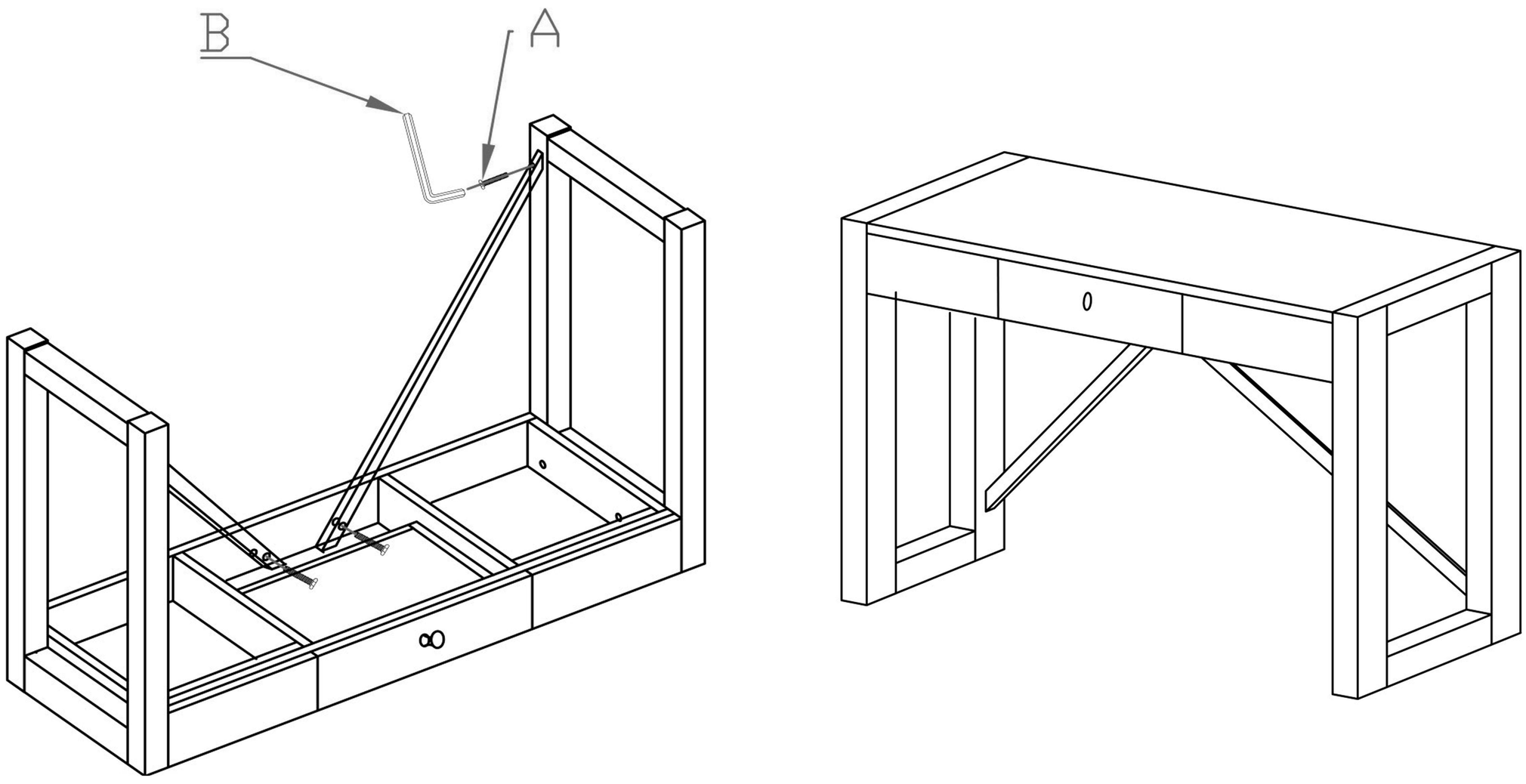
2